Customer: **Date :**

Réf :

Measurement of dimensions

TRIANON Echangeur

Number of rows: _____

Number of connections per manifold: _____

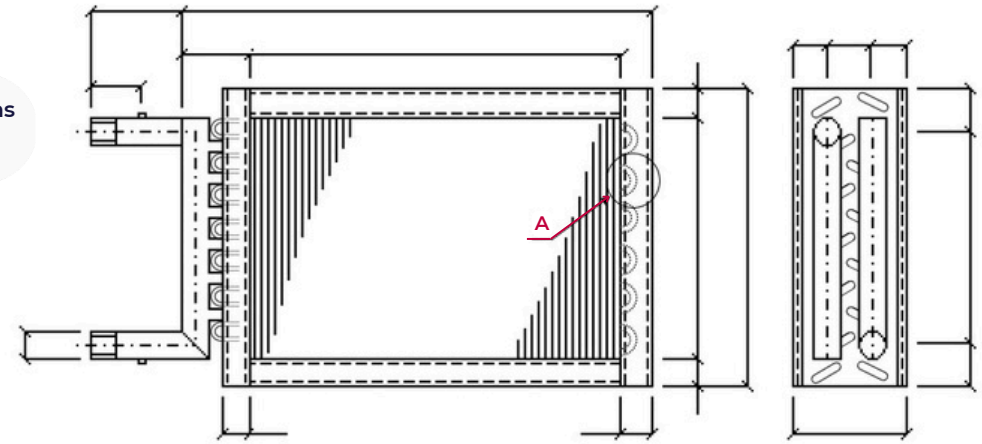

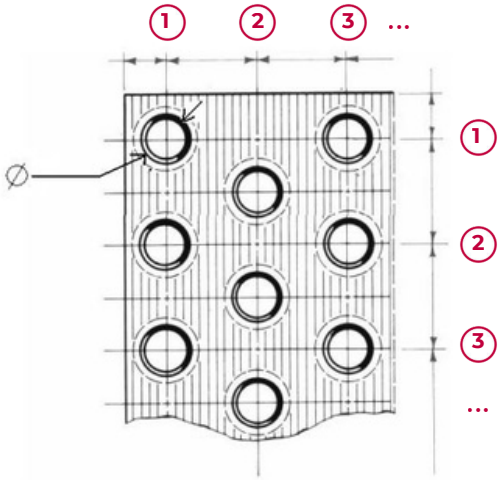

Number of tubes per row: _____

Détail A



* Elbows inscribed by default (if exceeded: specify the dimension)

TUBES

Diameter : _____ mm

MATERIALS
- Copper ☐
- CuNi 90-10 ☐
- Steel ☐
- Stainless steel 304/316 ☐

FINNED

SPACING

Length for 10 fins : _____ mm

MATERIALS
- Aluminium ☐
- Copper ☐
- **Steel** ☐
- Stainless steel 304/316 ☐

COLLECTORS

Diameter : _____ mm

- Copper ☐
- Steel ☐
- Stainless steel 304/316 ☐

FRAME

- FeZn ☐
- Stainless steel 304/316 ☐

CONNECTION

- Threaded ☐
- Welding strips ☐
- Flanges ☐

ASSEMBLY

- Sheath ☐
- CTA ☐

ACCESSORIES

- Anti-bypass plate ☐
- Sealing boxes ☐
- Condensate tray ☐
- Droplet separator ☐
- Surface treatments (Hérésite, cataphoresis...) ☐

Hydraulic connections and air flow direction:

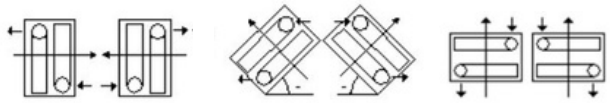

Tél. 01 30 83 92 30 - 26 D rue Henri Simon 78000 Versailles - contact@trianon-echangeur.com - www.trianon-echangeur.com

Annotations

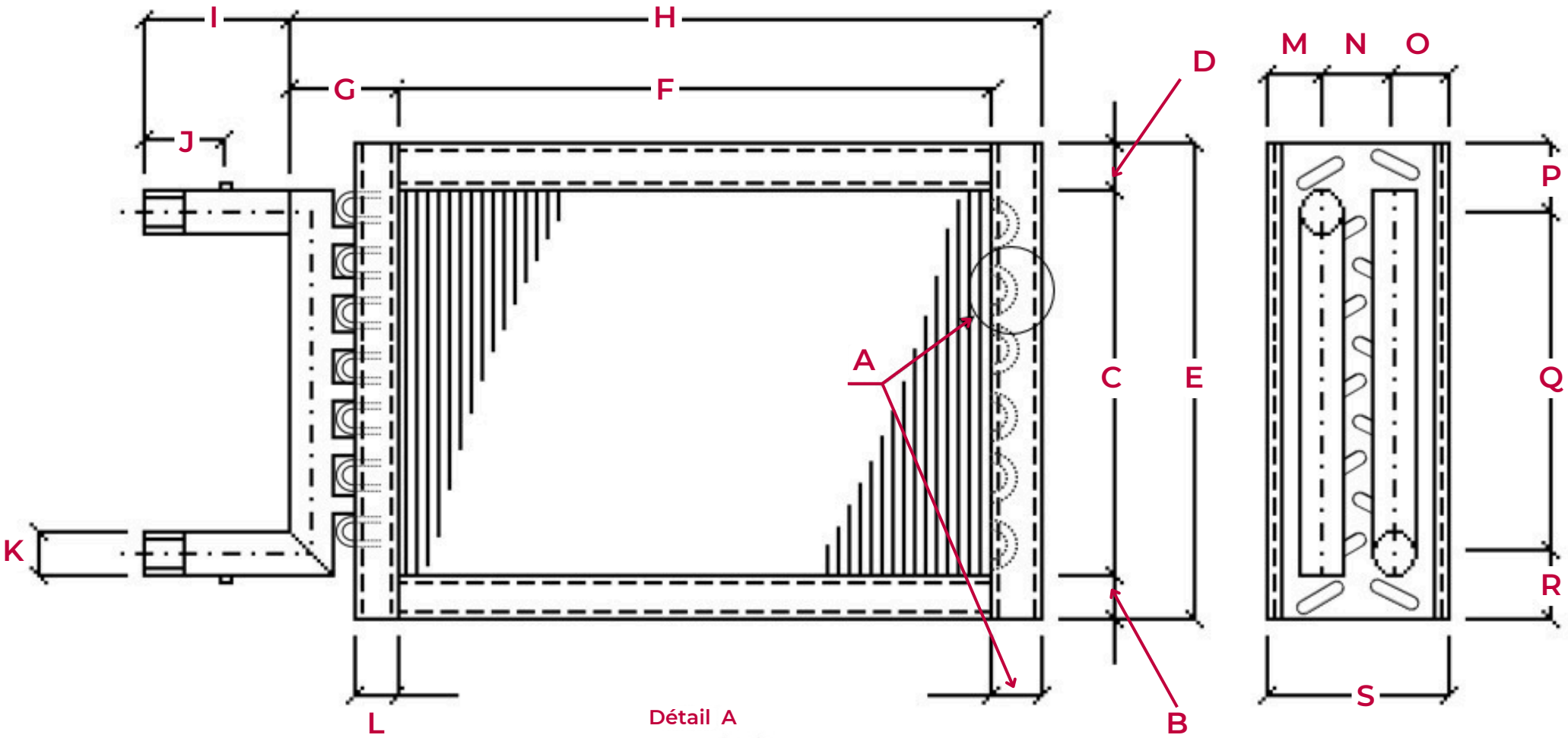

* Elbows inscribed by default (if exceeded: specify the dimension)

Tél. 01 30 83 92 30 - 26 D rue Henri Simon 78000 Versailles - contact@trianon-echangeur.com - www.trianon-echangeur.com